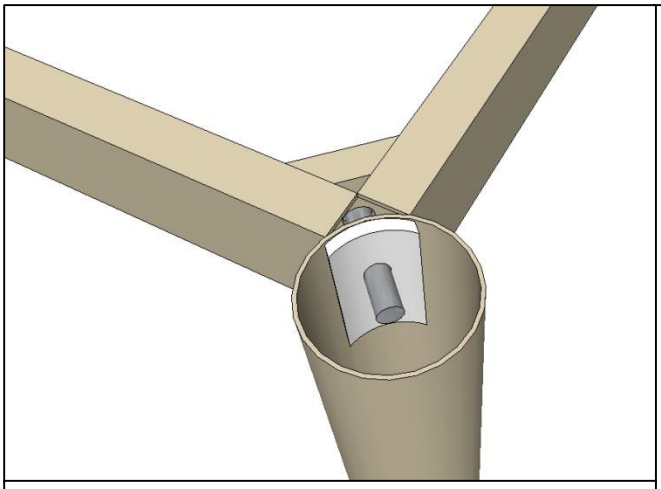

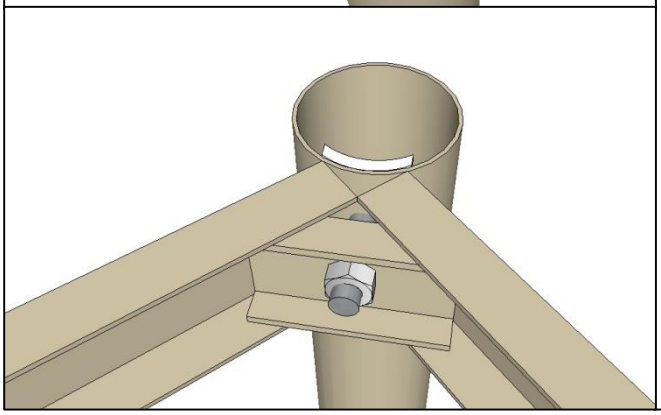

4x

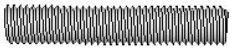

M10x75

4x

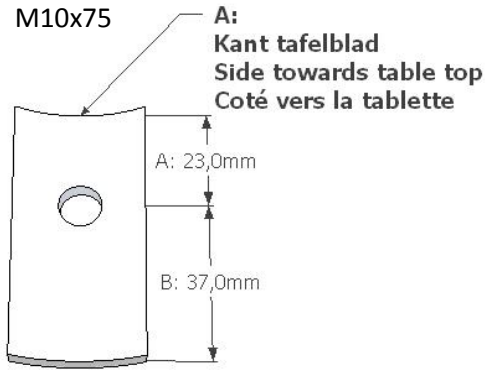


60x43x5mm

4x

M10